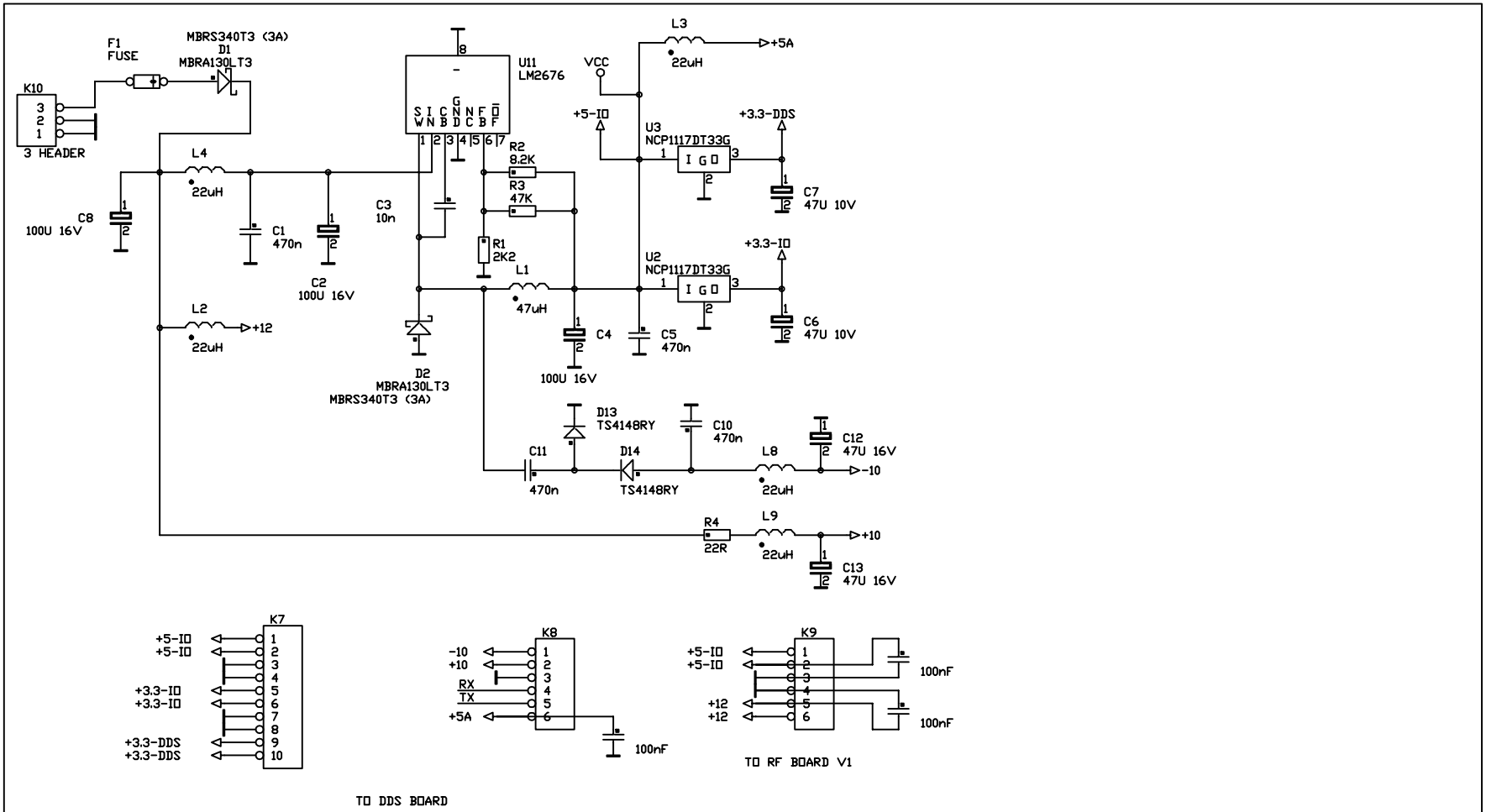

AVISEC

Spinveld 2a
4815 HS Breda
The Netherlands

Title	SDR Power & RFE control	
Size A	Document Number SDRPWR3	REV A
Date: December 29, 2009	Sheet 1 of 1	